UNIVERSITY OF DELAWARE SCALED SMART CITY

MELODY CERRO

UDSSC LAB

- Run by Dr. Andreas Malikopoulos
- Part of the Mechanical Engineering Department
- Focused on traffic simulations to assist the advancement of autonomous vehicles and their possible communication with each other as well as the implementation of drones

MY ROLE

- I was assigned to be the supervisor of designing the next version of the scaled vehicles
- I supervised 4 other members of the lab as they created the new chassis for these vehicles
- I provided insight on certain aspects of their designs and was in charge of ordering materials and parts for team, as well as the fabrication of 3D printed parts

DESIGN PROCESS (PART 1)

- We decided the best course of action was to start from scratch on the new version of the cars, due to the existing version being composed of multiple small pieces that were attached to a general body over time
- Shown below is the original car design

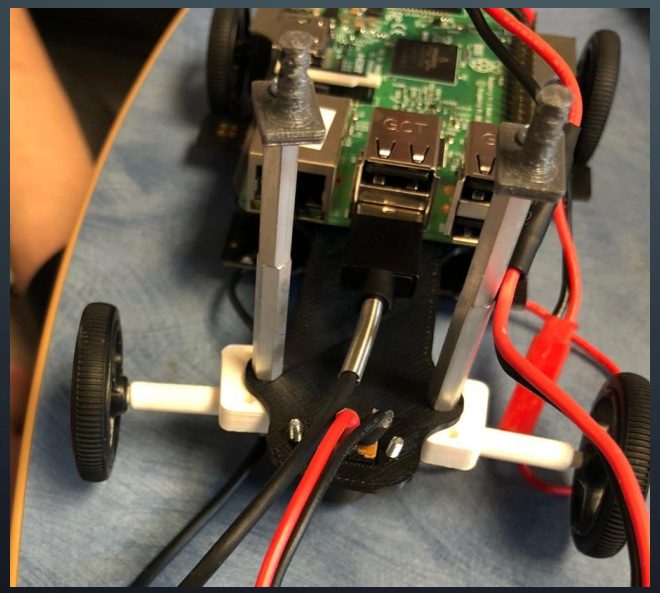

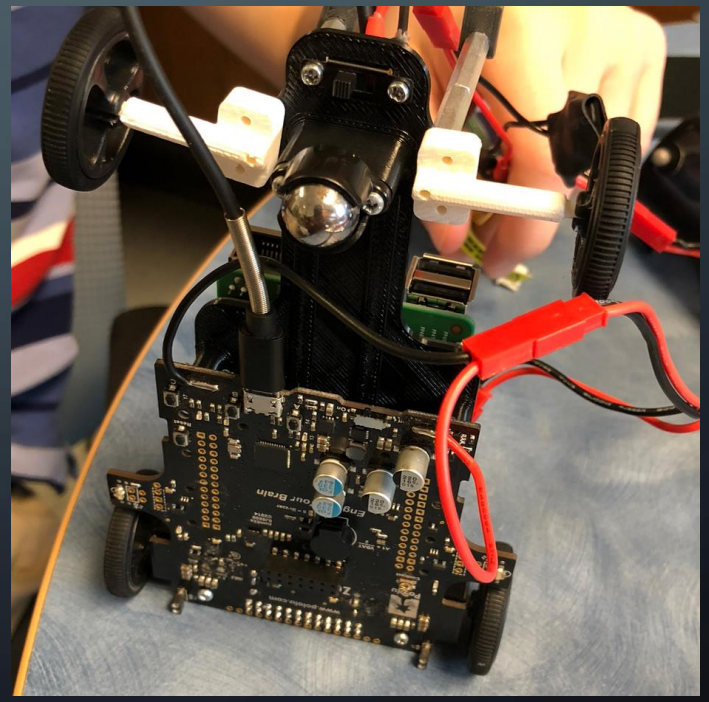

DESIGN PROCESS (PART 2)

- There were several requirements that the newest vehicles needed to include that made a custom design essential
  - Realistic steering
  - Adjustable camera mount
  - Mount for ultrasonic sensor
  - Inclusion of Raspberry Pi 3
  - Must be 1:24 scaled

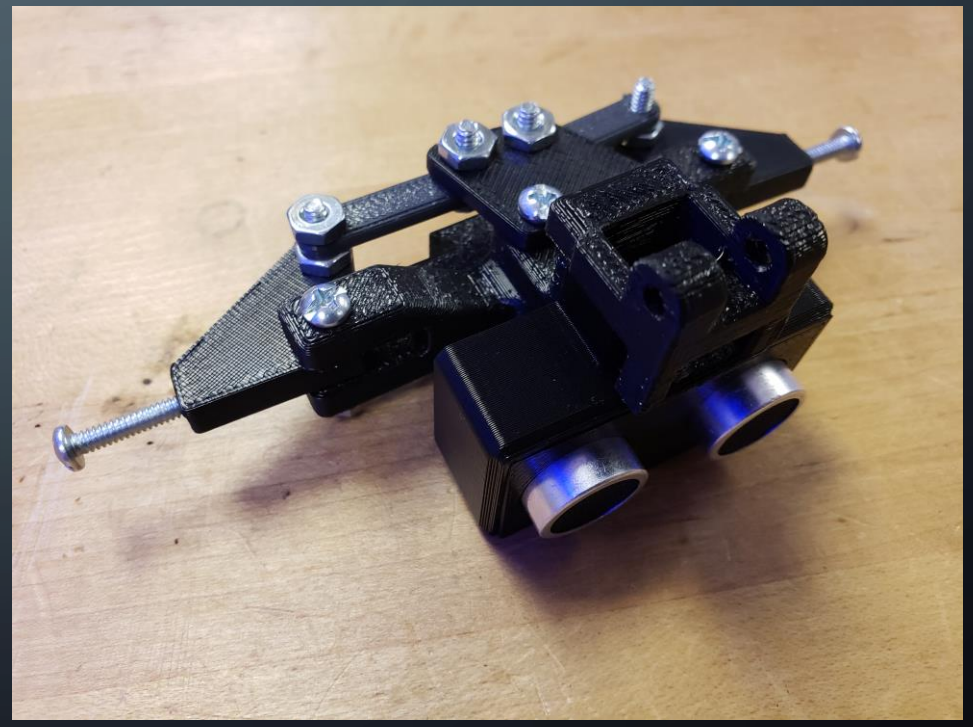

Picture shows fully functioning Ackerman Steering with included ultrasonic sensor built by Lucas Ramsey (high school intern)

CHASSIS STAGE 1&2

- The first two versions of the car were minimalistic just to test measurements

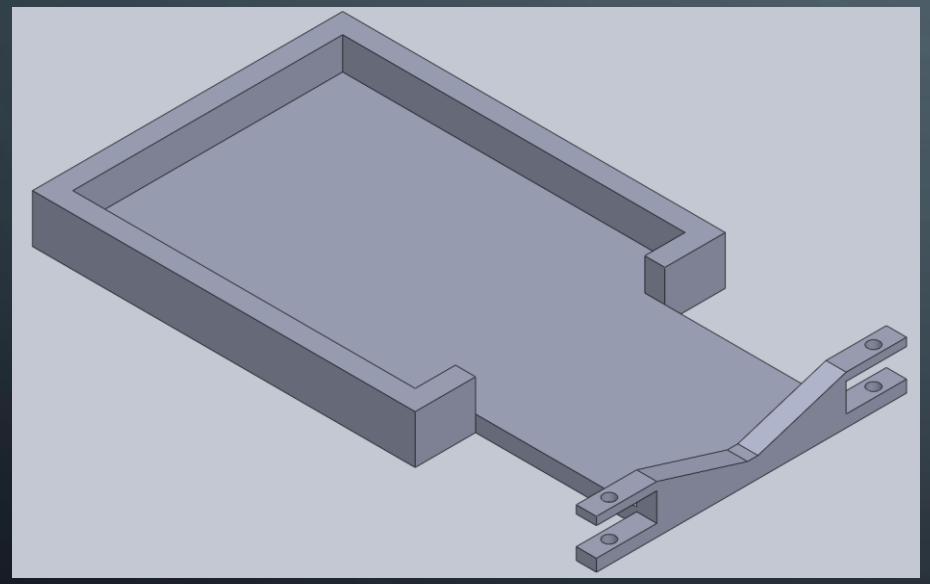

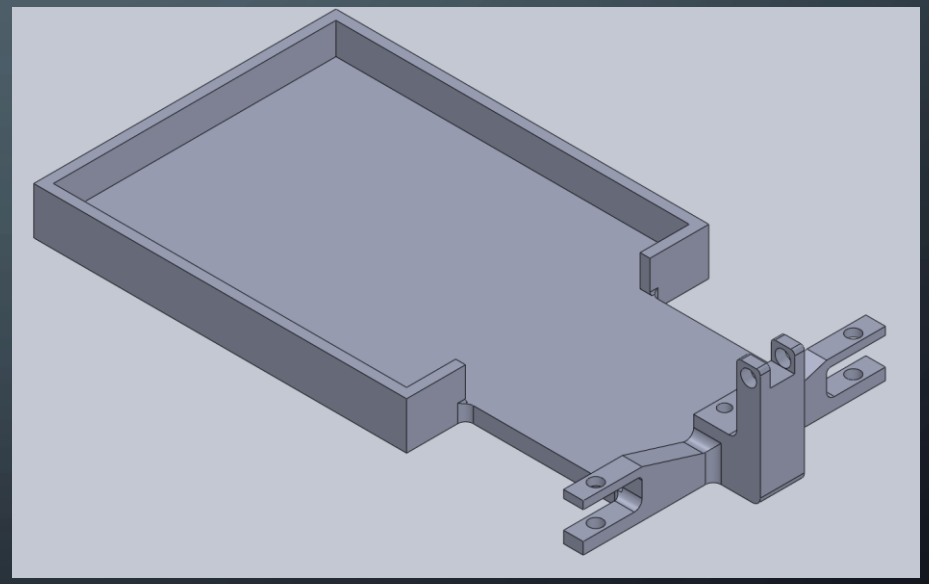

Concepts created and designed by Lucas Ramsey (high school intern) and Tommy Patterson (undergrad)

CHASSIS STAGE 3

- The versions shown below include a rough camera mount as well as battery and motor pockets in different orientations

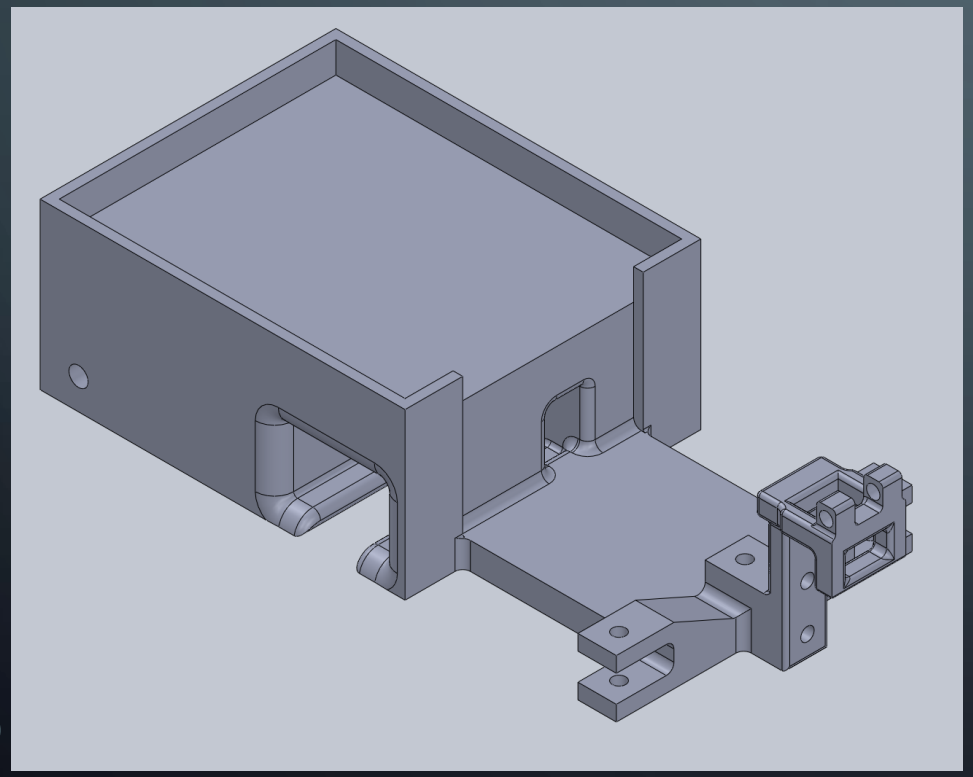

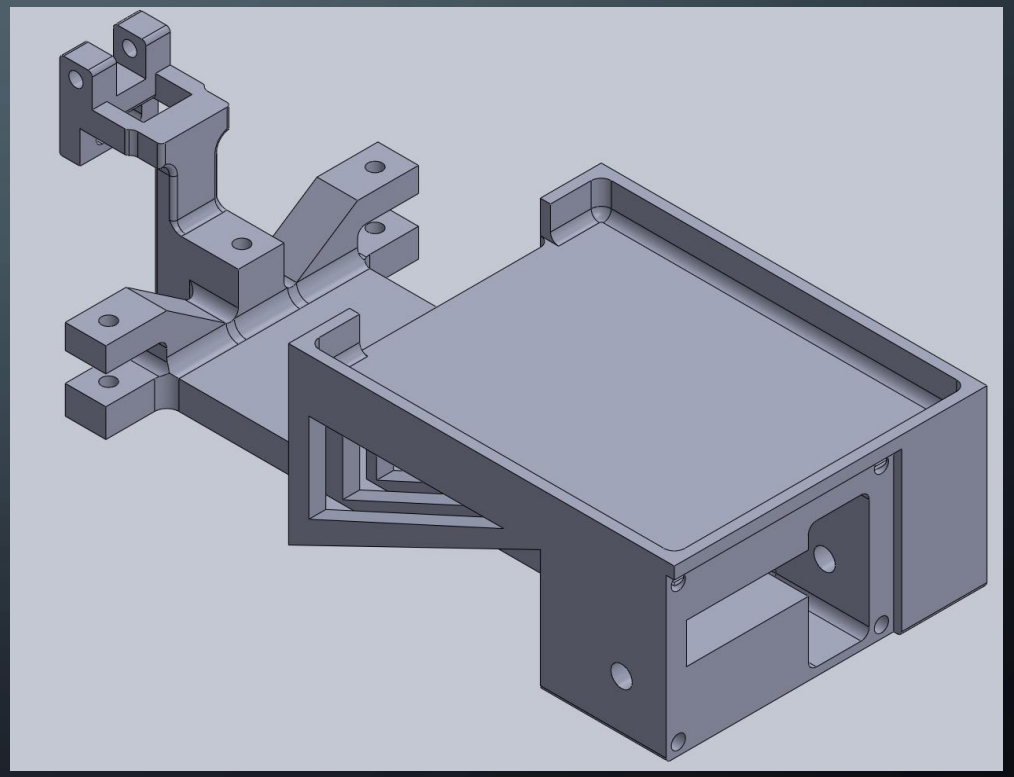

3D PRINTING

- The prototyping process was done by utilizing the departments 3D printers, which I run as well
- The finished design will be mass 3D printed (at least 30 cars)

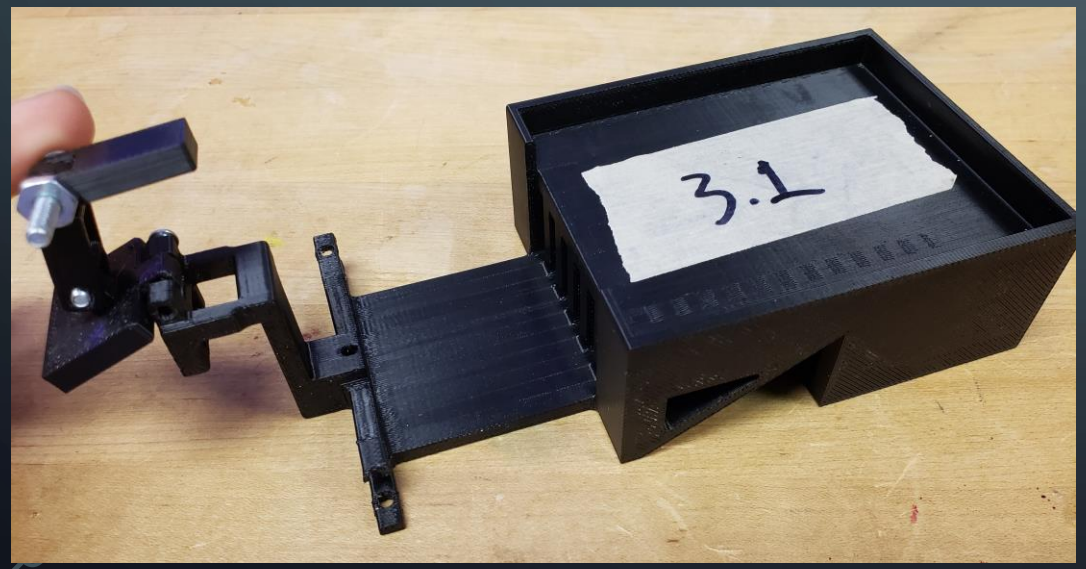

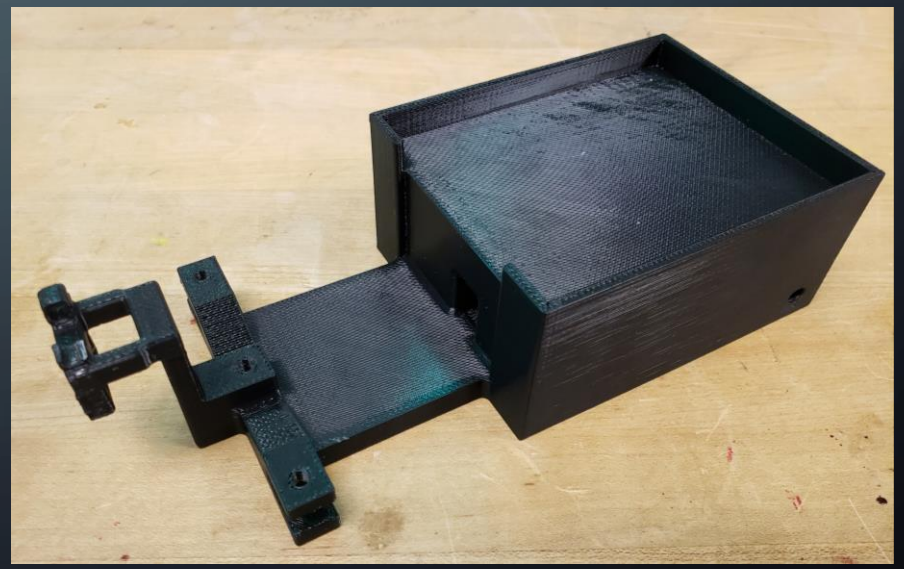

CURRENT VERSION

- The current version is very aesthetically pleasing (Bat symbol), and includes a removable motor box incase it needs to be replaced, as well as other attachments

Concept created and designed by Lucas Ramsey

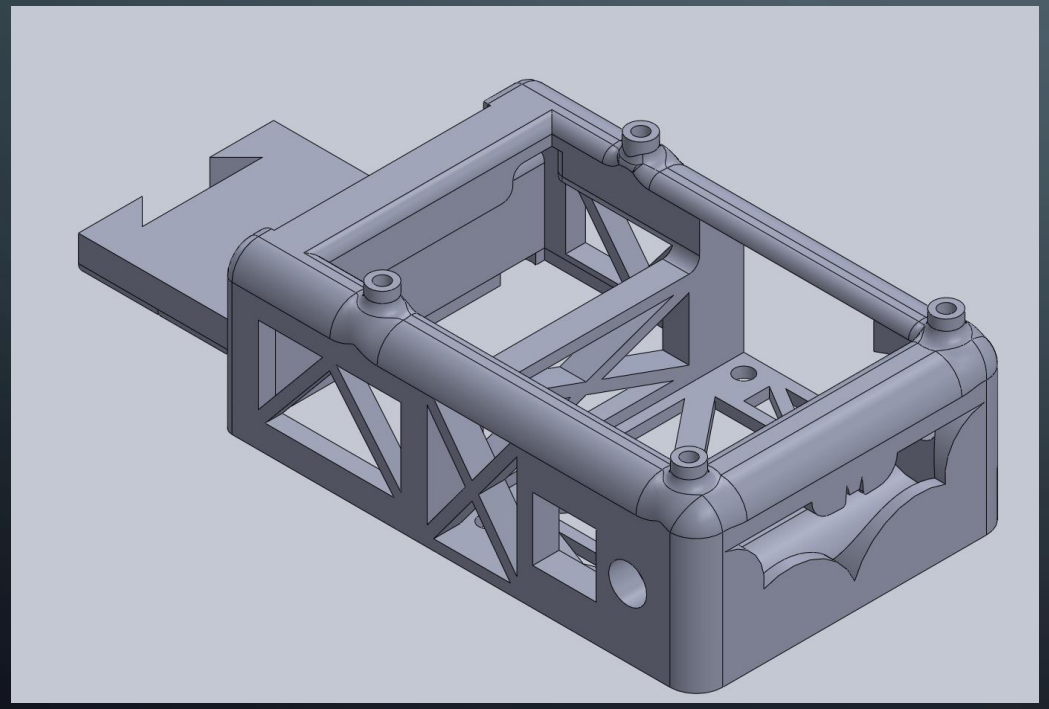

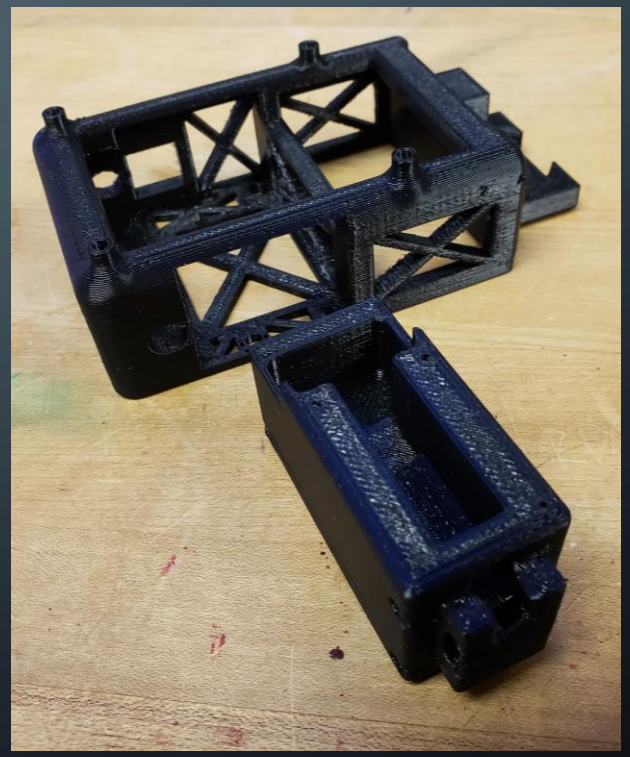

ADDITIONALLY

- I also worked with a grad student to create a different version of the autonomous vehicles
- I am still in the process of designing the chassis, but it will be completely form fitting to a Land Rover RC car body and will fit a smaller more powerful Raspberry Pi Zero
- Current version of the chassis I'm designing is shown here

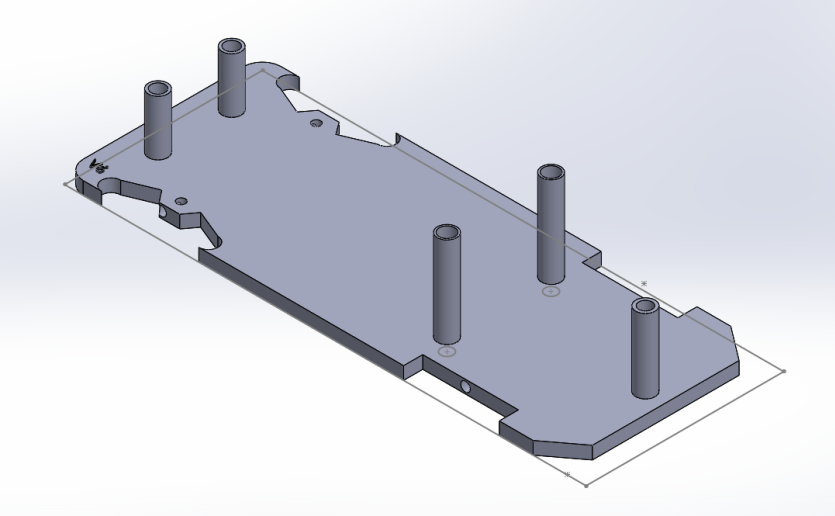

SIMULATION RUNNING

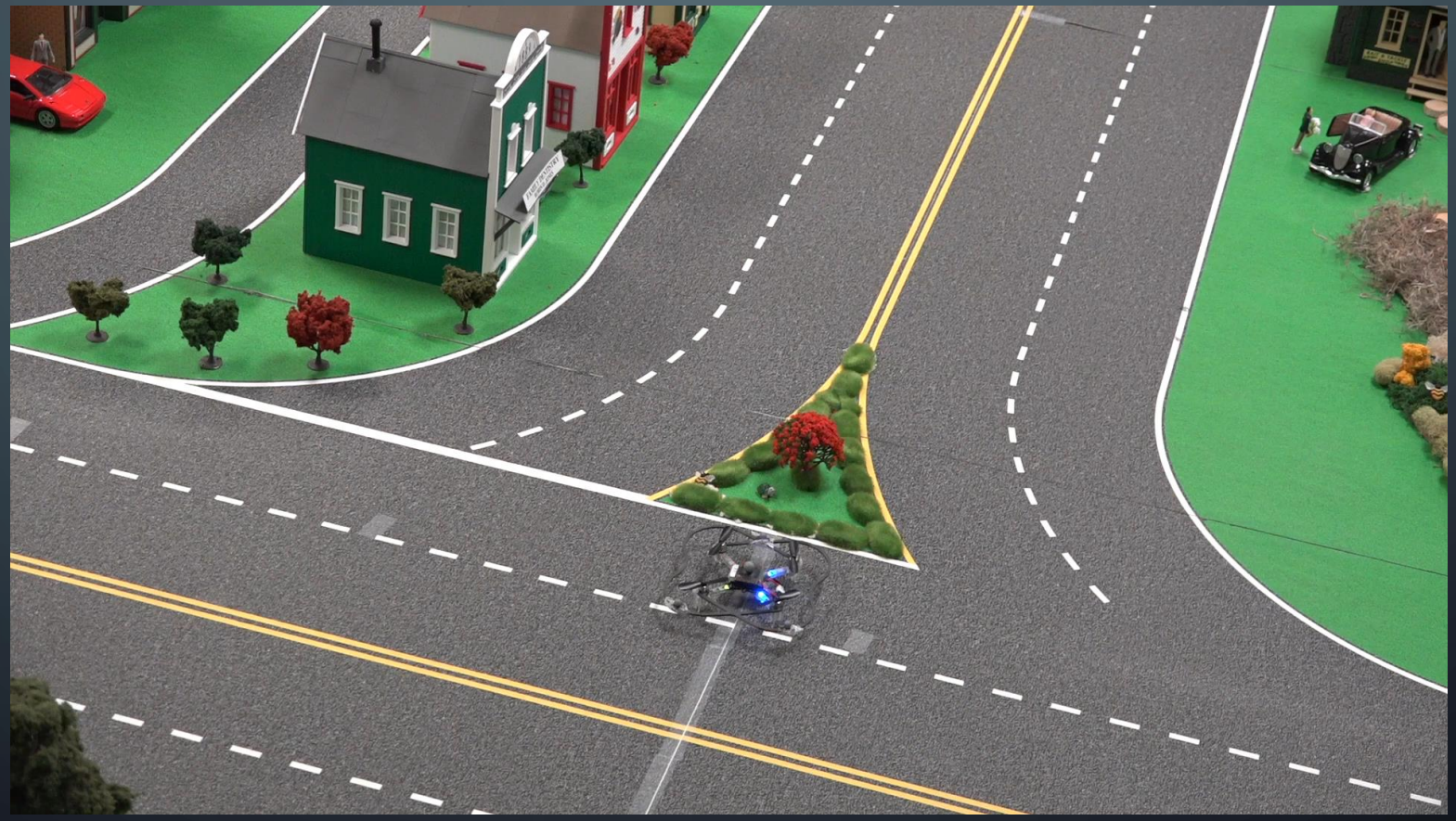

THANK YOU!

I truly appreciate the opportunity provided to me for the summer and hope to return next year as a Summer Scholar.

I hope you enjoyed my project.